EMO

ENVIRONMENT BY TECHNOLOGY

STEP TYPE SCREEN - DE series

Leader in the design and the manufacturing of treatment systems for drinking water, wastewater and sludge, EMO is present in 5 continents of the globe and holds more than 2500 recommendations to its credit since the company's creation in 1985.

The step type screen has been developped in the early 90's. The working principle of this technology is in opposition with the other types of screens (rake bar screens, chain or cable driven). Whereas for traditional screens the filtering surface (bar racks) is supposed to be fully cleaned after the passage of the rake in between the bars, whereas with step screens, the filtering surface is always covered by screening waste.
The mat of waste built against the bars is also used as a filter which will give a capture rate of 60-80% depending on bar spacing and application. Because of this specific operation, this kind of screen needs a minimum headloss of 200 mm (between upstream and downstream water levels) to optimize the performances.

Technical data

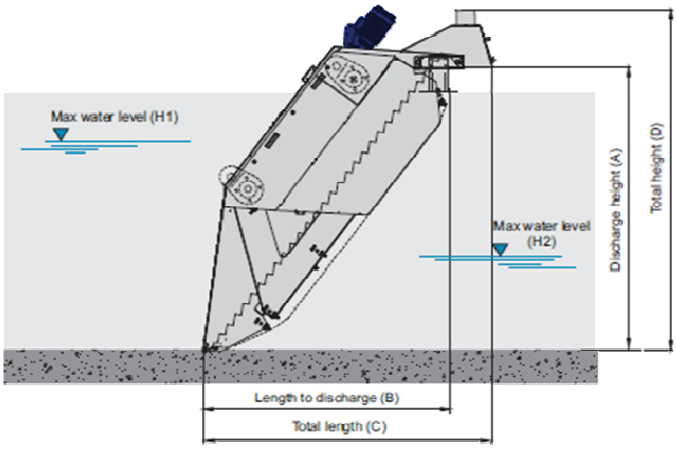

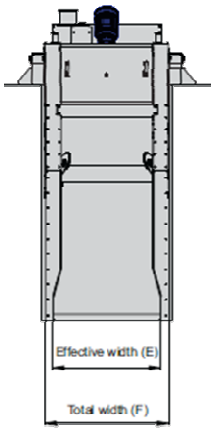

- Self cleaning
- No flushing water
- No brush
- Can handle sticky and oily greasy wastes
- Fully enclosed and ventilated
- Easy open access, lids for maintenance
- Adjustable mounting angle 45° to 60°
- Screening mesh from 1 to 6 mm

	DE 10	DE 14	DE 19	DE 23	DE 29	DE 35	DE 39	DE 47
Max discharge height (A)	1030	1380	1910	2330	2910	3480	3960	4700
Length to discharge (B)	1130	1470	1670	1990	2370	2790	3150	3740
Total length (C)	1438	1774	1996	2320	2674	3100	3462	4051
Total height (D)	1459	1808	2395	2820	3373	3943	4420	5160
Effective width (E)	176-972	176-1270	243-1743	243-1743	213-1713	413-1713	513-	513-
Total width (F)	276-1072	276-1370	387-1887	387-1887	393-1893	593-1893	693-	693-
Max water level								
Upstream (H1)	900	13200	1600	2050	2700	2800	2800	2800
Downstream (H2)	560	750	1000	1150	1600	1760	1760	1760

EMO
ENVIRONMENT BY TECHNOLOGY

afaq ISO 9001 Qualité AFNOR CERTIFICATION

Operating principle

Step type fine screen consists of one stationary and one movable set of bars. The sets of bars are mounted on cross beams and the bars are mounted together so that every second bar is fixed and the other is movable. The gap between the stationary and movable bars gives slot opening (screening mesh).
The motion of the movable bars lifts up the collected screenings material and transports it to the step above. In this way the screenings material that is collected on the screen is transported up, step by step, until it reaches the top where it falls down into a hopper, press or conveyor for further transportation. When the fine screen is in its home position screenings are collected on the bars, which with time begins to plug. The screen is designed so that no critical or mechanical are operating in the water. The step type screen fine bar screen is built-in in a frame consisting of two strong steel plates. The plates are connected with cross beams. The blades are easily accessible and removable for replacement.
The screen can pivot and be lifted up to the operation flow for maintenance operation in dry conditions. A patented flap system at the bottom of the screen prevents from blocking and damaging the bars package

Discharge

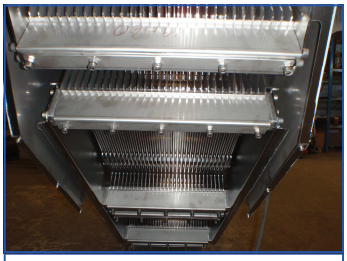

Blades support members

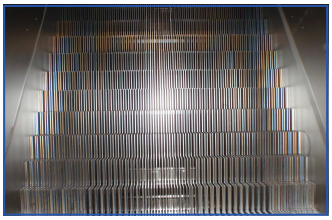

Pack of blades mobile and fixed

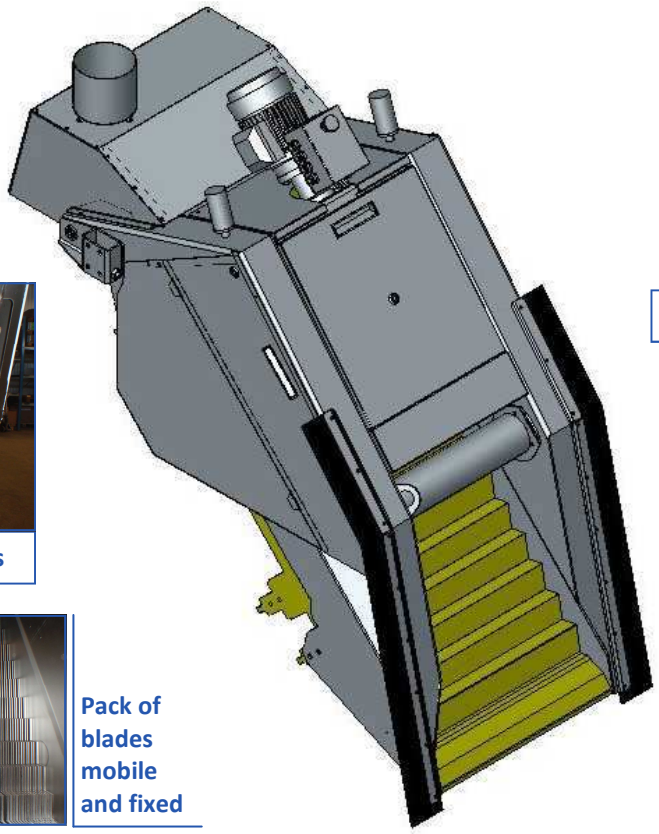

support legs. Adjusted on site.

Bottom with flap

Installations

EMO sas - 4, rue Lépine - P.A. de la Richardière - BP 53209 - 35532 Noyal-sur-Vilaine - France
Tél. : +33 (0)2 99 86 02 03 - Fax : +33 (0)2 99 86 02 04 - E-Mail : emo@emo-france.com - www.emo-france.com
S.A.S. au capital de 480 000 € - RCS Rennes B391 805 652 - Siret 391 805 652 00032 - APE 2829B